# Customer Information Sheet

| DRAWING No.: M80-4C10642F1-00-000-03-327 | SHEET 2 OF 2 | IF IN DOUBT - ASK | © | NOT TO SCALE | THIRD ANGLE PROJECTION | ALL DIMENSIONS IN mm |
|---|---|---|---|---|---|---|

## SPECIFICATIONS:

MATERIAL:
- MOULDING: GLASS FILLED PPS, UL94V-0, BLACK
- SIGNAL CONTACT:
  - CLIP = BERYLLIUM COPPER
  - SHELL = BRASS
- POWER CONTACT:
  - BODY = COPPER ALLOY
  - LATCHING COLLAR = BERYLLIUM COPPER
- JACKSCREW, CIRCLIP: STAINLESS STEEL

FINISH:
- SIGNAL CONTACT:
  - CLIP = 0.3µ GOLD
  - SHELL = 3.5-5.0µ 100% TIN OVER NICKEL
- POWER CONTACT:
  - BODY = GOLD
  - LATCHING COLLAR = NICKEL

ELECTRICAL:
- WORKING VOLTAGE = 120V AC/DC
- VOLTAGE PROOF = 360V AC/DC
- INSULATION RESISTANCE = 100MΩ MIN
- SIGNAL CONTACT:
  - CURRENT RATING AT 25°C = 3.0A MAX
  - CURRENT RATING AT 85°C = 2.2A MAX
  - CONTACT RESISTANCE = 25 mΩ MAX
- POWER CONTACT:
  - CONTACT RESISTANCE = 6 mΩ MAX
  - CURRENT RATING = 10A MAX WITH 16AWG CONTACT AS SPECIFIED

MECHANICAL:
- DURABILITY = 500 OPERATIONS
- SIGNAL CONTACT:
  - INSERTION FORCE = 2.8N MAX
  - WITHDRAWAL FORCE = 0.2N MIN
- POWER CONTACT:
  - INSERTION FORCE = 5N MAX
  - WITHDRAWAL FORCE = 0.5N MIN

ENVIRONMENTAL:
- TEMPERATURE RANGE = -55°C TO +125°C

PACKING:
- BAG

FOR COMPLETE SPECIFICATION SEE COMPONENT SPECIFICATION C005XX (LATEST ISSUE)

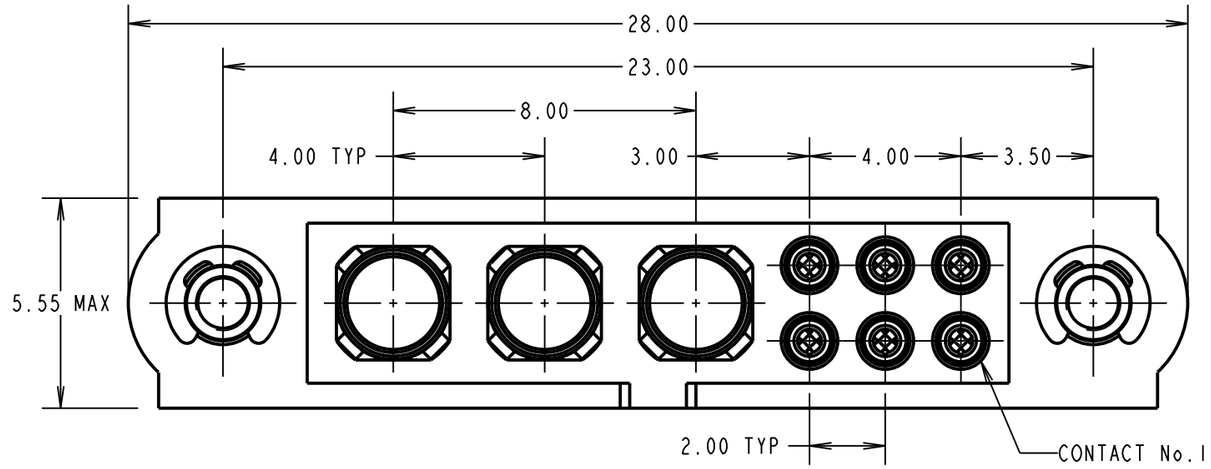


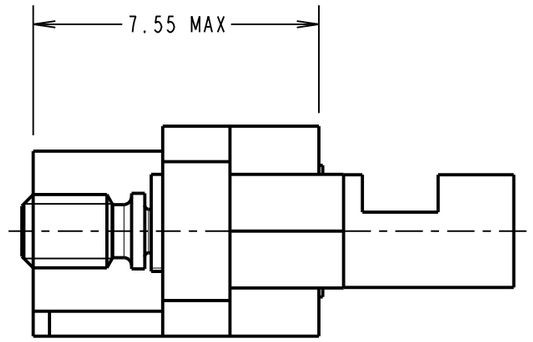


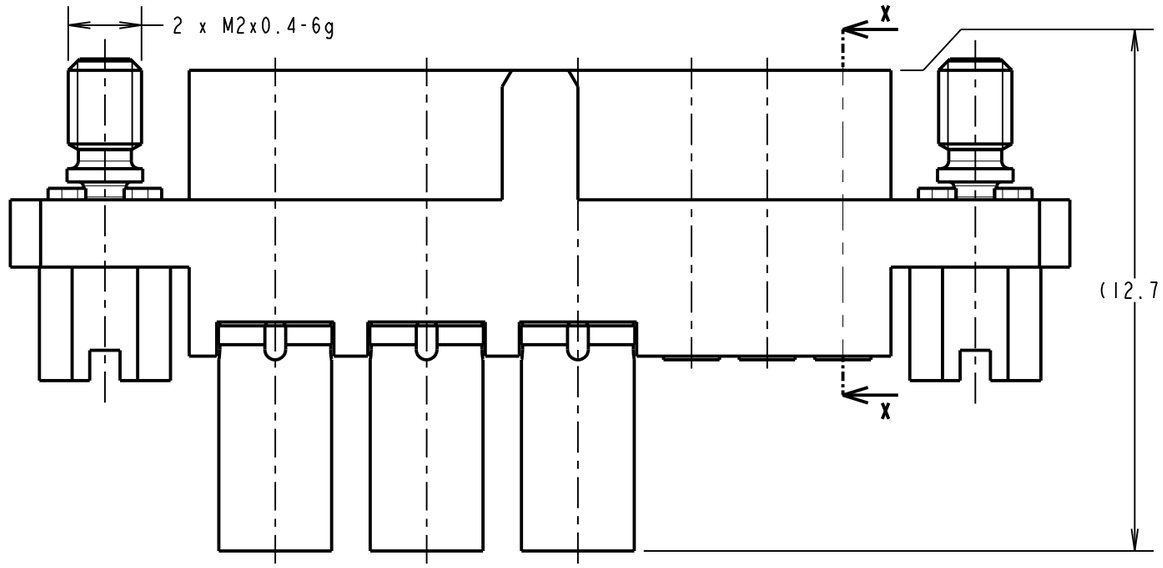


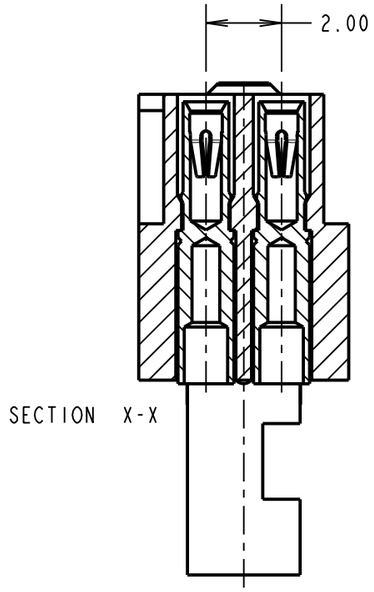


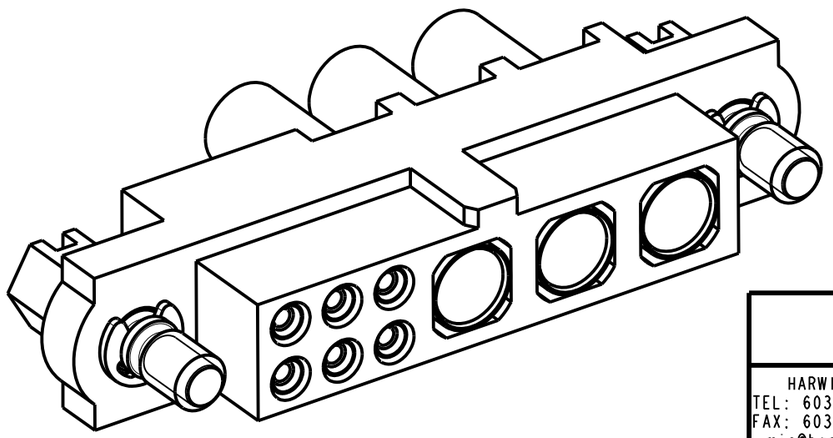

NOTES:
1. CONNECTORS ARE SUPPLIED WITH CONTACTS LOOSE.
2. FOR EXTRA SIGNAL CONTACTS, USE PART NUMBER M80-0130001.
3. RECOMMENDED SIGNAL WIRE TYPE = BS 3G 210 TYPE A, PTFE INSULATED 24-28 AWG. MAX INSULATION DIAMETER = Ø1.10mm. STRIP WIRE BY 2.00MM FOR CRIMPING.
4. RECOMMENDED HAND CRIMP TOOL FOR SIGNAL CONTACTS = M22520/2-01 WITH POSITIONER T5747.
5. SIGNAL CONTACT INSERTION AND EXTRACTION TOOL = Z80-280.
6. FOR EXTRA POWER CONTACTS, USE PART NUMBER M80-327
7. POWER CONTACT WIRE, STRIP BY 5.00mm MINIMUM
8. POWER CONTACT EXTRACTION TOOL = Z80-290
9. INSTRUCTION SHEETS ARE AVAILABLE.

| NAME | ISS. | DATE | C/NOTE |
|---|---|---|---|
| SM | 1 | 02.09.10 | 10806 |

APPROVED: S. MCCULLAGH
CHECKED: R. ADDE
DRAWN: M. G. PLESTED
CUSTOMER REF.:
ASSEMBLY DRG:


HARWIN

| HARWIN USA | HARWIN Europe (UK) | HARWIN Asia |
|---|---|---|
| TEL: 603 893 5376 | TEL: 023 9231 4545 | TEL: +65 6 779 4909 |
| FAX: 603 893 5396 | FAX: 023 9231 4590 | FAX: +65 6 779 3868 |
| mis@harwin.com | mis@harwin.co.uk | mis@harwin.com.sg |



THIS DRAWING AND ANY INFORMATION OR DESCRIPTIVE MATTER SET OUT HEREON ARE CONFIDENTIAL AND COPYRIGHT PROPERTY OF THE HARWIN GROUP AND MUST NOT BE DISCLOSED, LOANED, COPIED OR USED FOR MANUFACTURING, TENDERING OR FOR ANY OTHER PURPOSE WITHOUT THEIR WRITTEN PERMISSION.


TOLERANCES
X. = ±1mm
X.X = ±0.25mm
X.XX = ±0.10mm
X.XXX = ±0.01mm
ANGLES = ±5°
UNLESS STATED

MATERIAL: SEE ABOVE
FINISH: SEE ABOVE
S/AREA: mm²

TITLE: JACKSCREW DATAMATE MIXED TECHNOLOGY CRIMP FEMALE ASSEMBLY

DRAWING NUMBER: M80-4C10642F1-00-000-03-327

SHT 2 OF 2