Customer Information Sheet

DRAWING No.: M80-4C10642F1-03-327-00-000	IF IN DOUBT - ASK	©	NOT TO SCALE	THIRD ANGLE PROJECTION	ALL DIMENSIONS IN mm

SPECIFICATIONS:

MATERIAL:
- MOULDING: GLASS FILLED PPS, UL94V-0, BLACK
- SIGNAL CONTACT:
  - CLIP = BERYLIUM COPPER
  - SHELL = COPPER ALLOY
- POWER CONTACT:
  - BODY = COPPER ALLOY
  - LATCHING COLLAR = BERYLLIUM COPPER
- JACKSCREW, CIRCLIP: STAINLESS STEEL

FINISH:
- SIGNAL CONTACT:
  - CLIP = 0.3µm GOLD OVER NICKEL
  - SHELL = 3.5-5.0µm 100% TIN OVER NICKEL
- POWER CONTACT:
  - BODY = GOLD OVER NICKEL
  - LATCHING COLLAR = NICKEL

ELECTRICAL:
- WORKING VOLTAGE = 800V AC/DC
- VOLTAGE PROOF = 1200V AC/DC
- INSULATION RESISTANCE = 100MΩ MIN
- SIGNAL CONTACT:
  - CURRENT RATING AT 25°C = 3.0A MAX
  - CURRENT RATING AT 85°C = 2.2A MAX
  - CONTACT RESISTANCE = 25mΩ MAX
- POWER CONTACT:
  - CONTACT RESISTANCE = 6mΩ MAX
  - CURRENT RATING = 10A MAX WITH 16AWG CONTACT AS SPECIFIED

MECHANICAL:
- DURABILITY = 500 OPERATIONS
- SIGNAL CONTACT:
  - INSERTION FORCE = 2.0N MAX
  - WITHDRAWAL FORCE = 0.2N MIN
- POWER CONTACT:
  - INSERTION FORCE = 8N MAX
  - WITHDRAWAL FORCE = 0.5N MIN

ENVIRONMENTAL:
- TEMPERATURE RANGE = -55°C TO +125°C

PACKING:
- BAG

FOR COMPLETE SPECIFICATION SEE COMPONENT SPECIFICATION C005XX (LATEST ISSUE)

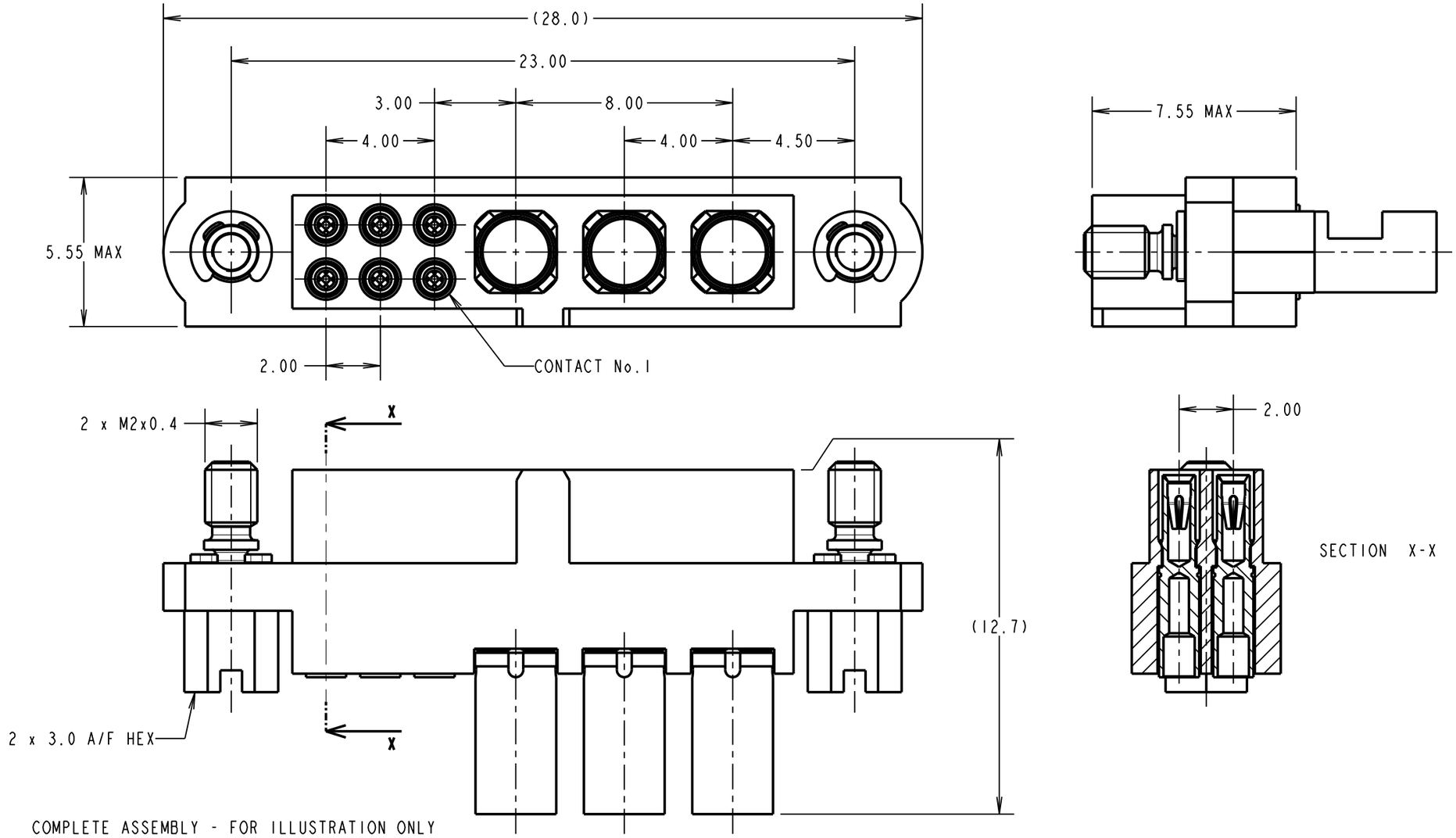

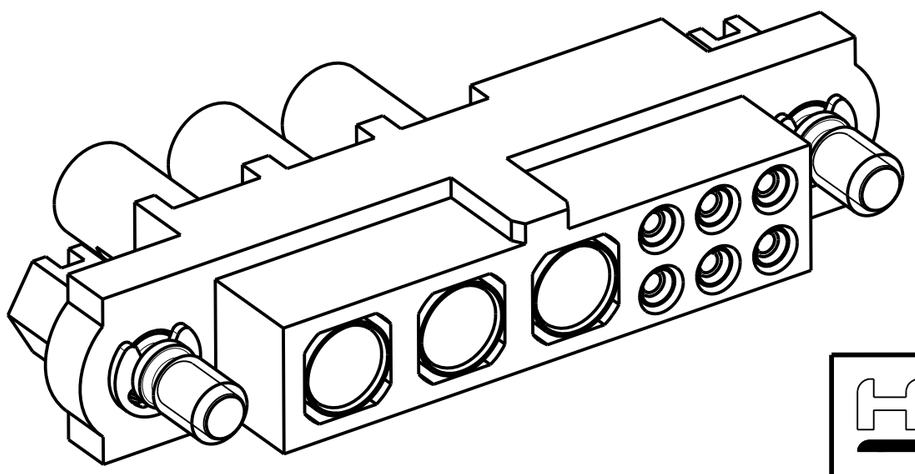

NOTES:
1. CONNECTORS ARE SUPPLIED WITH CONTACTS LOOSE.
2. FOR EXTRA SIGNAL CONTACTS, USE PART NUMBER M80-0130001.
3. RECOMMENDED SIGNAL WIRE TYPES = BS 3G 210 TYPE A AND MIL 16878/6 PTFE INSULATED 24-28 AWG.
   MAX INSULATION DIAMETER = Ø1.10mm. STRIP WIRE BY 2.00mm FOR CRIMPING.
4. RECOMMENDED HAND CRIMP TOOL FOR SIGNAL CONTACTS = M22520/2-01 WITH POSITIONER T5747. REFER TO TOOLING INSTRUCTION SHEET IS-01 FOR COMPLETE CRIMPING INSTRUCTIONS.
5. SIGNAL CONTACT INSERTION AND EXTRACTION TOOL = Z80-280.REFER TO TOOLING INSTRUCTION SHEET IS-25 FOR ASSEMBLY INSTRUCTIONS.
6. FOR EXTRA POWER CONTACTS, USE PART NUMBER M80-327.
7. POWER CONTACT WIRE, STRIP BY 5.00mm MINIMUM.
8. POWER CONTACT EXTRACTION TOOL = Z80-290.
9. INSTRUCTION SHEETS ARE AVAILABLE.

NAME	ISS.	DATE	CN/CO
MGP	1	19.06.20	----

APPROVED: MGP
CHECKED: RA
DRAWN: M.G.PLESTED
CUSTOMER REF.:
ASSEMBLY DRG:

HARWIN
www.harwin.com
technical@harwin.com

THIS DRAWING AND ANY INFORMATION OR DESCRIPTIVE MATTER SET OUT HEREON ARE CONFIDENTIAL AND COPYRIGHT PROPERTY OF THE HARWIN GROUP AND MUST NOT BE DISCLOSED, LOANED, COPIED OR USED FOR MANUFACTURING, TENDERING OR FOR ANY OTHER PURPOSE WITHOUT THEIR WRITTEN PERMISSION.

TOLERANCES
X. = ±1mm
X.X = ±0.50mm
X.XX = ±0.20mm
X.XXX = ±0.01mm
ANGLES = ±5°
UNLESS STATED

MATERIAL: SEE ABOVE
FINISH: SEE ABOVE
S/AREA: mm²

TITLE: JACKSCREW DATAMATE MIXED TECHNOLOGY CRIMP FEMALE ASSEMBLY

DRAWING NUMBER: M80-4C10642F1-03-327-00-000

SHT 2 OF 2