# Customer Information Sheet

| DRAWING No.: M80-5L10605M7-06-333-00-000 | SHEET 2 OF 2 | IF IN DOUBT - ASK | © | NOT TO SCALE | THIRD ANGLE PROJECTION | ALL DIMENSIONS IN mm |
|---|---|---|---|---|---|---|

## SPECIFICATIONS:

MATERIAL:
- MOULDING: GLASS FILLED PPS, UL94V-0, BLACK
- SIGNAL CONTACT: PHOSPHOR BRONZE
- POWER CONTACT: COPPER ALLOY
- BOARD-MOUNT JACKSCREW, SCREW: STAINLESS STEEL

FINISH:
- SIGNAL CONTACT:
  - 0.75µ ALL OVER GOLD
- POWER CONTACT: GOLD

ELECTRICAL:
- WORKING VOLTAGE = 800V AC/DC
- VOLTAGE PROOF = 1200V AC/DC
- INSULATION RESISTANCE = 100MΩ MIN
- SIGNAL CONTACT:
  - CURRENT RATING AT 25°C = 3.0A MAX
  - CURRENT RATING AT 85°C = 2.2A MAX
  - CONTACT RESISTANCE = 25mΩ MAX
- POWER CONTACT:
  - CONTACT RESISTANCE 6mΩ MAX
  - CURRENT RATING = 20A MAX

MECHANICAL:
- DURABILITY = 500 OPERATIONS
- SIGNAL CONTACT:
  - INSERTION FORCE = 2.0N MAX
  - WITHDRAWAL FORCE = 0.2N MIN
- POWER CONTACT:
  - INSERTION FORCE = 8N MAX
  - WITHDRAWAL FORCE = 0.5N MIN

ENVIRONMENTAL:
- TEMPERATURE RANGE = -55°C TO +125°C

PACKING:
- TUBE

FOR COMPLETE SPECIFICATION SEE COMPONENT SPECIFICATION C005XX (LATEST ISSUE)

NOTES:
1. CONNECTORS ARE SUPPLIED WITH SCREWS LOOSE.

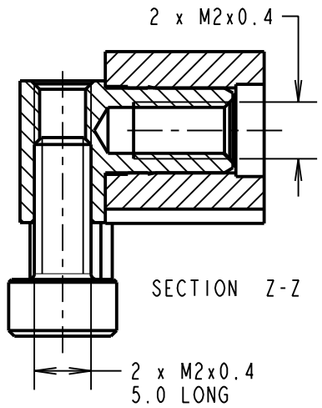


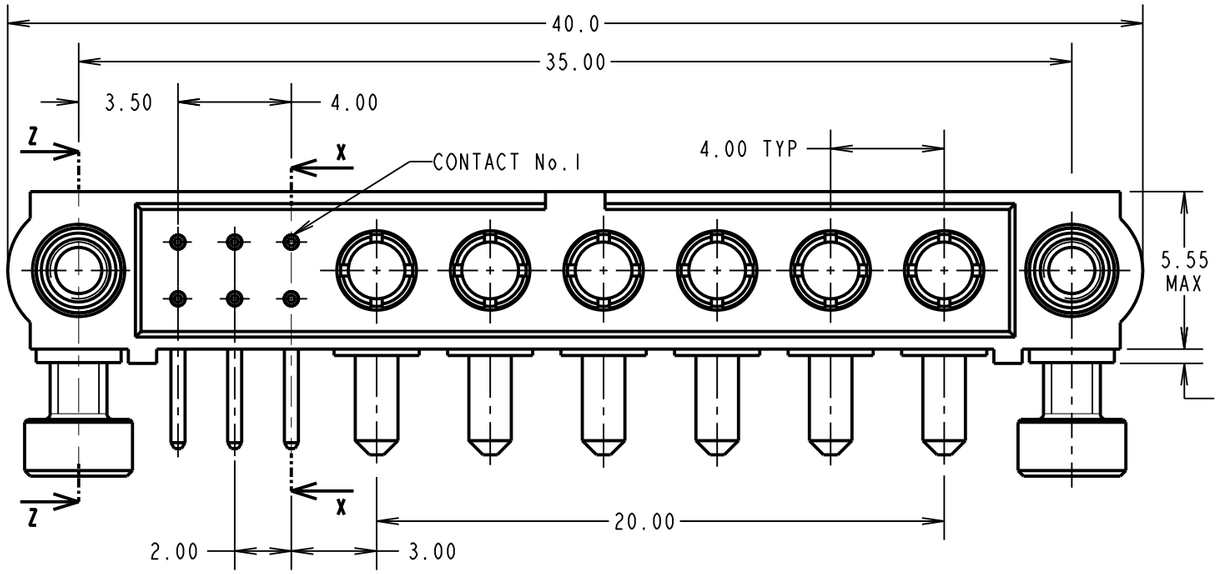


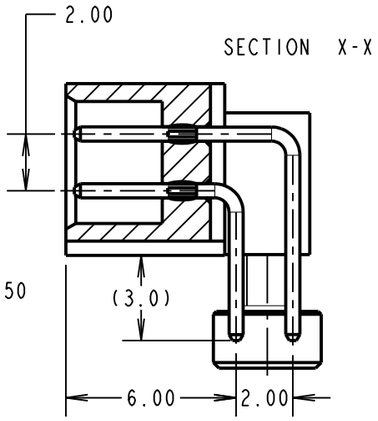


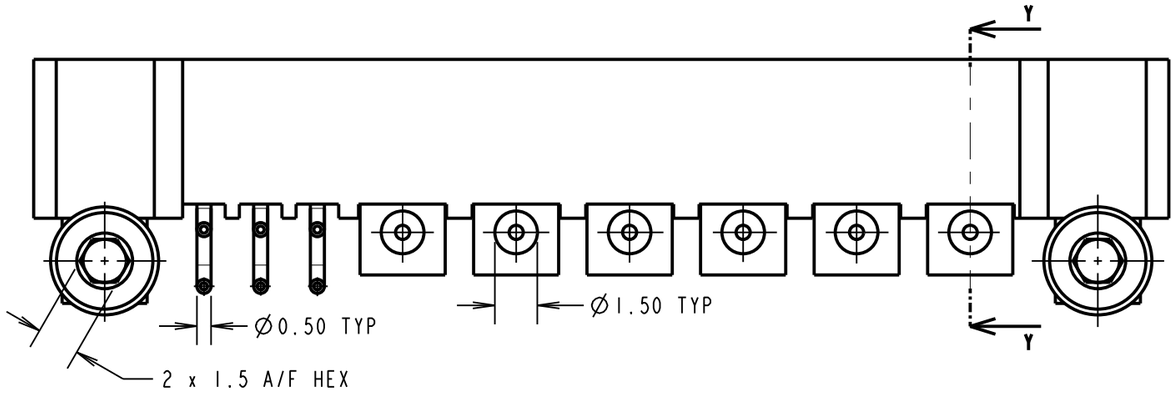


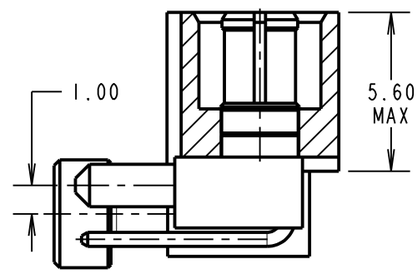


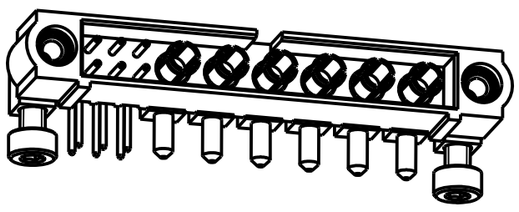

COMPLETE ASSEMBLY SHOWN FOR ILLUSTRATION ONLY

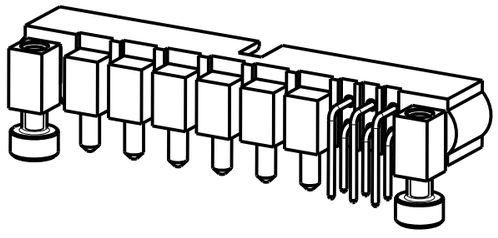

VIEW OF POWER CONTACT

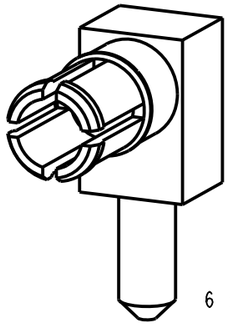

RECOMMENDED PCB LAYOUT

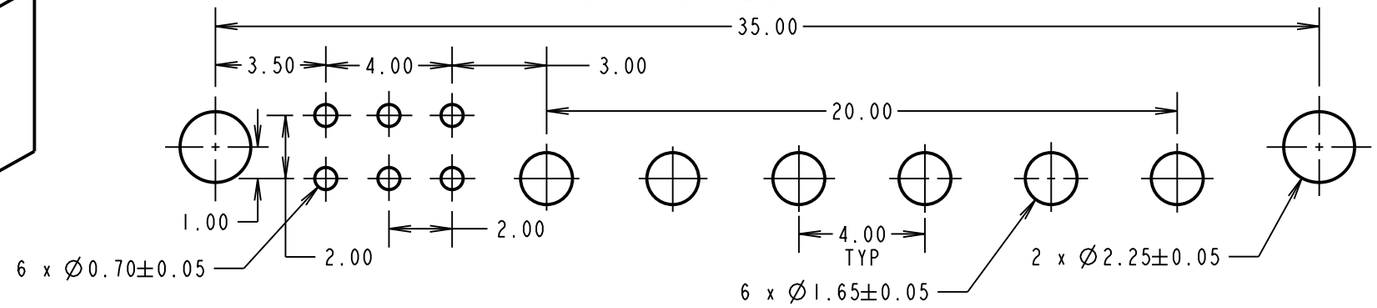


| NAME | ISS. | DATE | C/NOTE |
|---|---|---|---|
| LS | 2 | 17.10.17 | 13269 |

APPROVED: LS
CHECKED: SB
DRAWN: C.PENROSE
CUSTOMER REF.:
ASSEMBLY DRG:

HARWIN
www.harwin.com
technical@harwin.com

THIS DRAWING AND ANY INFORMATION OR DESCRIPTIVE MATTER SET OUT HEREON ARE CONFIDENTIAL AND COPYRIGHT PROPERTY OF THE HARWIN GROUP AND MUST NOT BE DISCLOSED, LOANED, COPIED OR USED FOR MANUFACTURING, TENDERING OR FOR ANY OTHER PURPOSE WITHOUT THEIR WRITTEN PERMISSION.

TOLERANCES
X. = ±1mm
X.X = ±0.50mm
X.XX = ±0.10mm
X.XXX = ±0.01mm
ANGLES = ±5°
UNLESS STATED

MATERIAL: SEE ABOVE
FINISH: SEE ABOVE
S/AREA: mm²

TITLE: JACKSCREW DATAMATE MIXED TECHNOLOGY VERTICAL PC TAIL MALE ASSEMBLY

DRAWING NUMBER: M80-5L10605M7-06-333-00-000

SHT 2 OF 2