Customer Information Sheet

DRAWING No.: M80-5TI2042M3-04-311-00-000	SHEET 2 OF 2	IF IN DOUBT - ASK	©	NOT TO SCALE	THIRD ANGLE PROJECTION	ALL DIMENSIONS IN mm

SPECIFICATIONS:

MATERIAL:
- MOULDING: GLASS FILLED PPS, UL94V-0, BLACK
- SIGNAL CONTACT: PHOSPHOR BRONZE
- COAX CONTACT:
  - BODY = COPPER ALLOY
  - INNER CONTACT = PHOSPHOR BRONZE
  - INSULATOR = PTFE
- BOARD-MOUNT JACKSCREW, NUT: STAINLESS STEEL

FINISH:
- SIGNAL CONTACT:
  - 0.75µ GOLD ON CONTACT AREA,
  - 3µ 100% TIN OVER NICKEL ON TAILS
- COAX CONTACT: BODY, INNER CONTACT = GOLD

ELECTRICAL:
- WORKING VOLTAGE = 800V AC/DC
- VOLTAGE PROOF = 1200V AC/DC
- INSULATION RESISTANCE = 100MΩ MIN
- SIGNAL CONTACT:
  - CURRENT RATING AT 25°C = 3.0A MAX
  - CURRENT RATING AT 85°C = 2.2A MAX
  - CONTACT RESISTANCE = 25mΩ MAX
- COAX CONTACT:
  - FREQUENCY RANGE = 6GHz
  - IMPEDANCE = 50Ω
  - V.S.W.R = 1.05 + (0.04 x FREQUENCY) GHz MAX
  - CONTACT RESISTANCE 6mΩ MAX
  - INSULATION RESISTANCE = 10^6MΩ @250V AC
  - OPERATING VOLTAGE = 180V AC @ 500mA
  - MAXIMUM VOLTAGE = 1000V AC

MECHANICAL:
- DURABILITY = 500 OPERATIONS
- SIGNAL CONTACT:
  - INSERTION FORCE = 2.0N MAX
  - WITHDRAWAL FORCE = 0.2N MIN
- COAX CONTACT:
  - INSERTION FORCE = 8N MAX
  - WITHDRAWAL FORCE = 0.5N MIN

ENVIRONMENTAL:
- TEMPERATURE RANGE = -55°C TO +125°C

PACKING:
- TUBE

FOR COMPLETE SPECIFICATION SEE COMPONENT SPECIFICATION C005XX (LATEST ISSUE)

NOTE:
1. CONNECTORS ARE SUPPLIED WITH NUTS LOOSE.

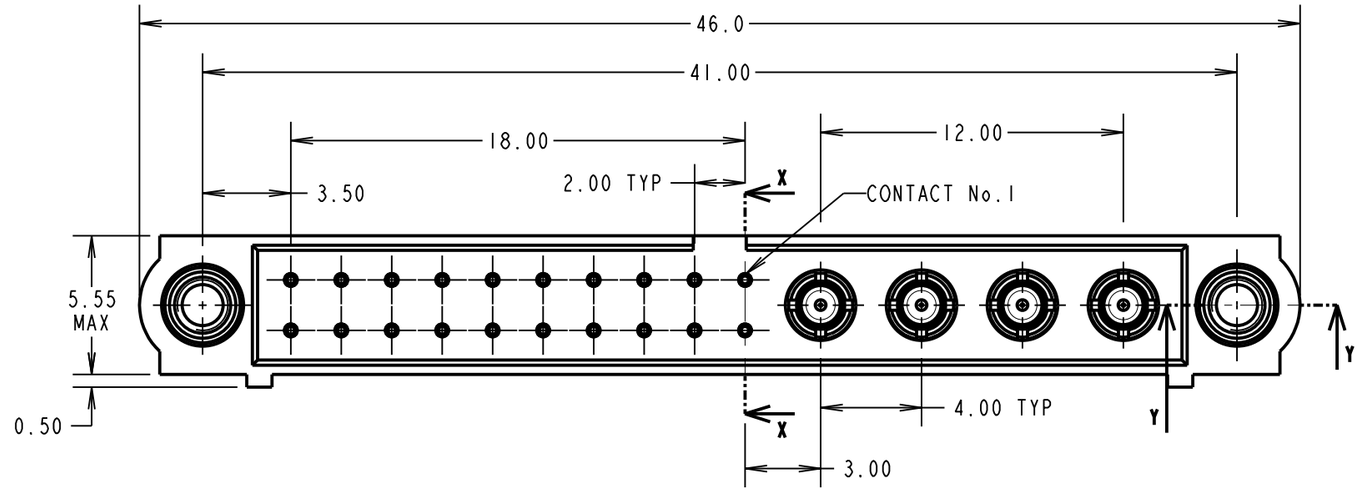

SECTION X-X

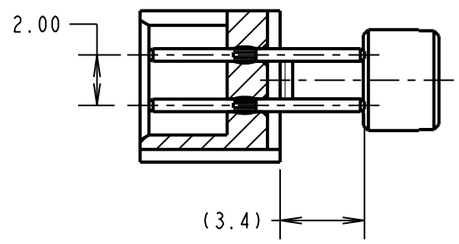

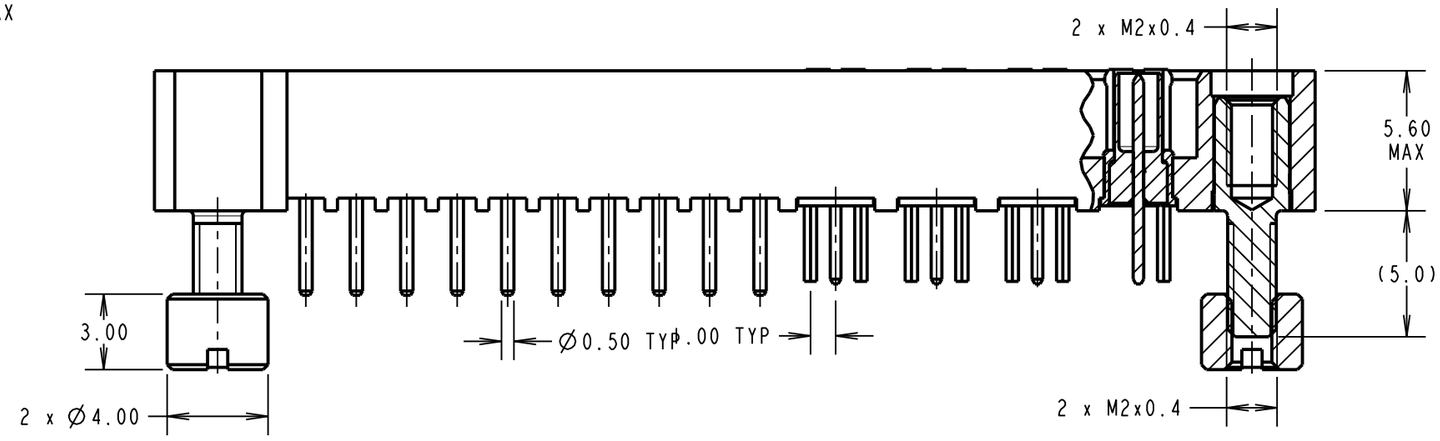

PART SECTION Y-Y

VIEW OF COAX CONTACT

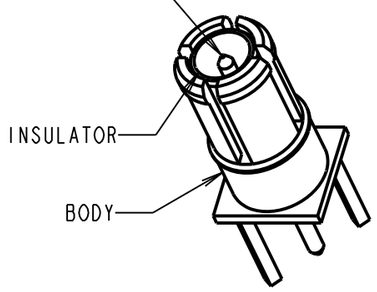

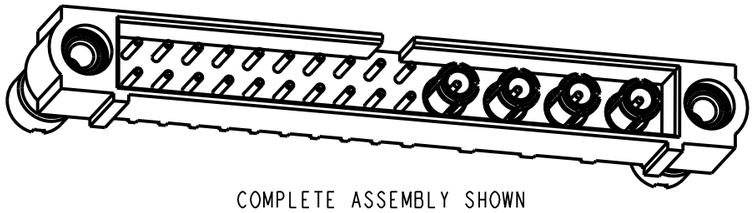

COMPLETE ASSEMBLY SHOWN FOR ILLUSTRATION ONLY

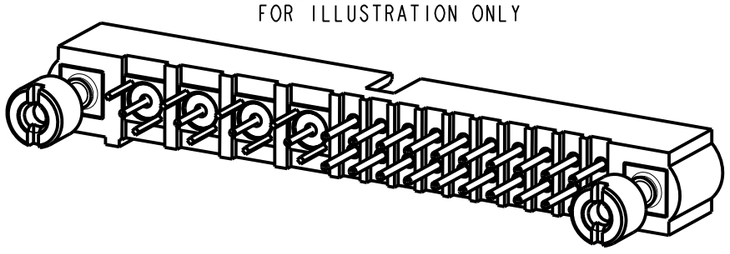

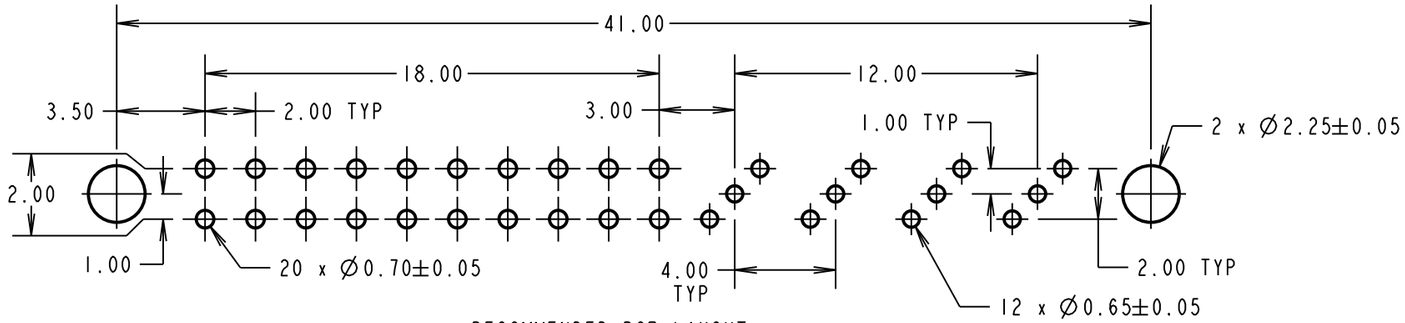

RECOMMENDED PCB LAYOUT

FM	2	22.09.17	13269
NAME	ISS.	DATE	C/NOTE

APPROVED: F. MCGOWAN
CHECKED: M. PLESTED
DRAWN: S. MCCULLAGH
CUSTOMER REF.:
ASSEMBLY DRG:

HARWIN
www.harwin.com
technical@harwin.com

THIS DRAWING AND ANY INFORMATION OR DESCRIPTIVE MATTER SET OUT HEREON ARE CONFIDENTIAL AND COPYRIGHT PROPERTY OF THE HARWIN GROUP AND MUST NOT BE DISCLOSED, LOANED, COPIED OR USED FOR MANUFACTURING, TENDERING OR FOR ANY OTHER PURPOSE WITHOUT THEIR WRITTEN PERMISSION.

TOLERANCES
X. = ±1mm
X.X = ±0.50mm
X.XX = ±0.10mm
X.XXX = ±0.01mm
ANGLES = ±5°
UNLESS STATED

MATERIAL: SEE ABOVE
FINISH: SEE ABOVE
S/AREA: mm²

TITLE: JACKSCREW DATAMATE MIXED TECHNOLOGY VERTICAL PC TAIL MALE ASSEMBLY

DRAWING NUMBER: M80-5TI2042M3-04-311-00-000

SHT 2 OF 2